LOCATION OF PROPERTY:
Access to Street _____

Exact Distance _____ ☐ Feet ☐ N ☐ S ☐ E ☐ W

From the Intersection of Street _____ and Street _____ Toward Street _____

CITY OF HENDERSON

STREET AND DRIVEWAY ACCESS PERMIT APPLICATION

PROPERTY WILL BE USED FOR: ☐ Special Commercial ☐ Regular Commercial ☐ Residential /Subdivision ☐ Other

PROPERTY IS: ☐ within Henderson City Limits ☐ within Henderson ETJ

DRIVEWAY WILL BE: ☐ Culvert Installation (Roadside Ditch) ☐ Driveway Cut (Curb and Gutter Street)

AGREEMENT

I, the undersigned property owner, request access and permission to construct driveway(s) or street(s) on public right-of-way at the above location.

I agree to construct and maintain driveway(s) or street entrance(s) in absolute conformance with the current "Policy on Street and Driveway Access to City of Henderson and/or North Carolina Highways" as adopted by the City of Henderson.

I agree that no signs or objects will be placed on or over the public right-of-way.

I agree that the driveway(s) or street(s) will be constructed as shown on the sketch on (the reverse side) (the attached plans).

I agree that that driveway(s) or street(s) as used in this agreement include any approach tapers, storage lanes or speed change lanes as deemed necessary.

I agree that if any future improvements to the roadway become necessary, the portion of driveway(s) or street(s) located on public right-of-way will be considered the property of the City of Henderson, and I will not be entitled to reimbursement or have any claim for present expenditures for driveway or street construction.

I agree that this permit becomes void if construction of driveway(s) or street(s) is not completed within the time specified by the "Policy on Street and Driveway Access to North Carolina Highways".

I agree to pay a $50 application/inspection fee for driveway cuts or culverts. Make checks payable to City of Henderson.

I agree to construct and maintain the driveway(s) or street(s) in a safe manner so as not to interfere with or endanger public travel.

I agree to provide proper construction signs, signal lights, flaggers and other warning devices for the protection of traffic and construction workers in conformance with the current "Manual on Uniform Traffic Control Devices for Streets and Highways" and Amendments or Supplements thereto. Information as to the above rules and regulations may be obtained from the City Engineer.

I agree to indemnify and save harmless the City of Henderson from all damages and claims for damage that may arise by reason of this construction.

I agree that the City of Henderson will assume no responsibility for any damages that may be caused to such facilities, within the highway right-of-way limits, in carrying out its construction.

I agree to provide a Performance Bond in the amount specified by the City of Henderson for any construction proposed on the State Highway system.

I AGREE TO NOTIFY THE CITY ENGINEER WHEN THE PROPOSED WORK BEGINS AND WHEN IT IS COMPLETED.

PROPERTY OWNER		WITNESS	
NAME	_____	NAME	_____
SIGNATURE	_____ DATE _____	SIGNATURE	_____ DATE _____
ADDRESS	_____	ADDRESS	_____
	_____		_____
PHONE NO.	_____	PHONE NO.	_____

APPLICANT		WITNESS	
NAME	_____	NAME	_____
SIGNATURE	_____ DATE _____	SIGNATURE	_____ DATE _____
ADDRESS	_____	ADDRESS	_____
	_____		_____
PHONE NO.	_____	PHONE NO.	_____

TO BE COMPLETED BY CITY STAFF

ENTRANCE NUMBER	ENTRANCE WIDTH	PIPE SIZE	PIPE LENGTH	INSPECTION SATISFACTORY (YES/NO)	INSTALLATION BY: ☐ CITY (PIPE ONLY) ☐ OTHERS		
1							
					INSPECTOR (PRINT NAME)	SIGNATURE	DATE
2							
					INSPECTOR (PRINT NAME)	SIGNATURE	DATE
3							
					INSPECTOR (PRINT NAME)	SIGNATURE	DATE

NOTE: Submit Four Copies of Application to the City of Henderson Engineering Department

APPROVALS

CITY ENGINEER (PRINT NAME)	**SIGNATURE**	**DATE**
DEVELOPMENT SERVICES DIRECTOR (PRINT NAME)	**SIGNATURE**	**DATE**
ASSISTANT CITY MANAGER / CITY MANAGER (PRINT NAME)	**SIGNATURE**	**DATE**

COMMENTS:

SHOW:

1. LOCATION OF EXISTING DRIVEWAYS
2. DETAILS OF WORK, INCLUDING PIPES
3. EXISTING BUILDING, WALL, ETC.
4. PROPOSED BUILDING, WALL, ETC.
5. HIGHWAY FEATURES

PROPOSED PLANS

DRAW OR SKETCH BELOW, OR ATTACH CONSTRUCTION PLANS FOR STREETS

INDICATE NORTH

NOTE: Submit Four Copies of Application to the City of Henderson Engineering Department

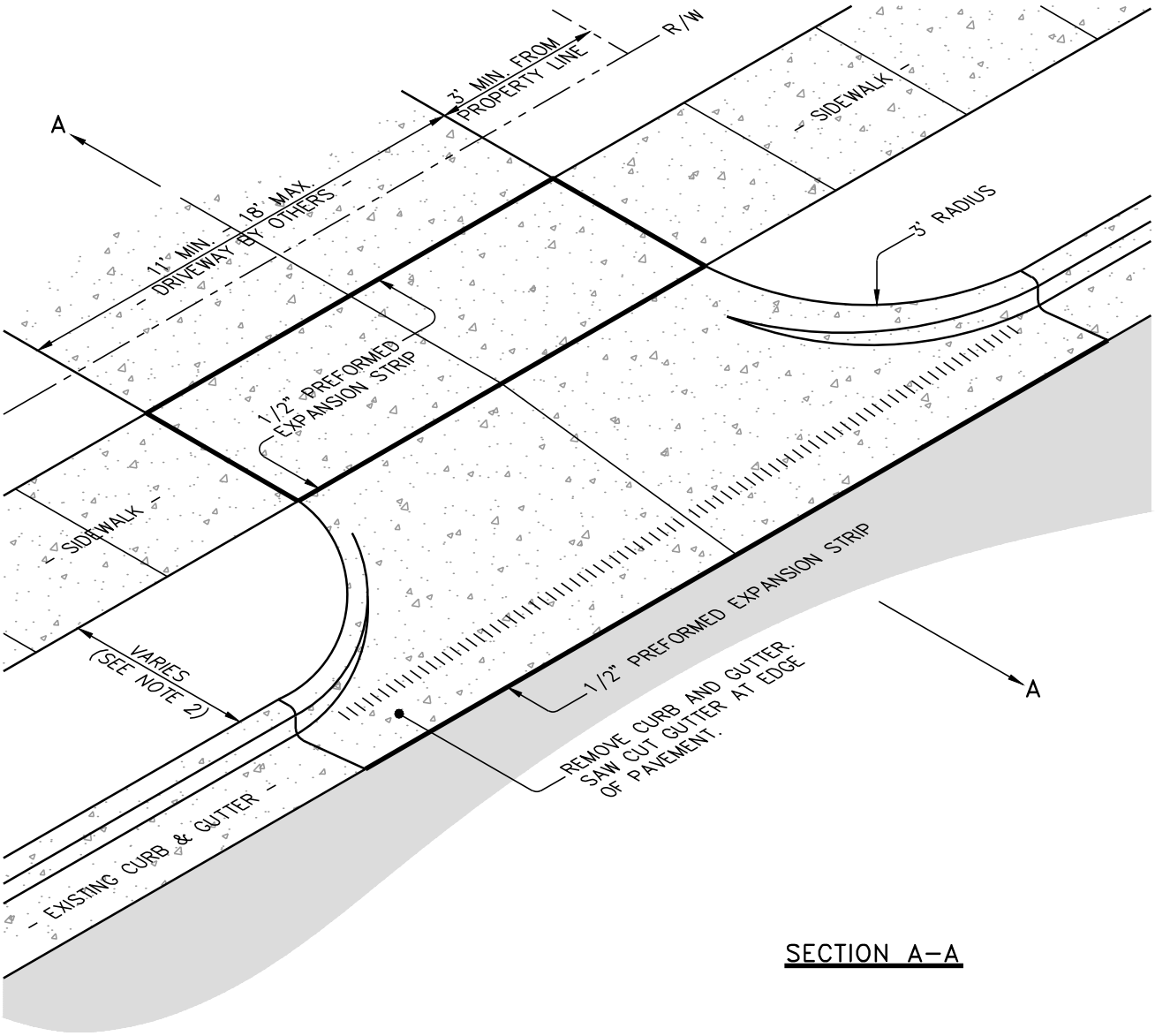

SECTION A–A

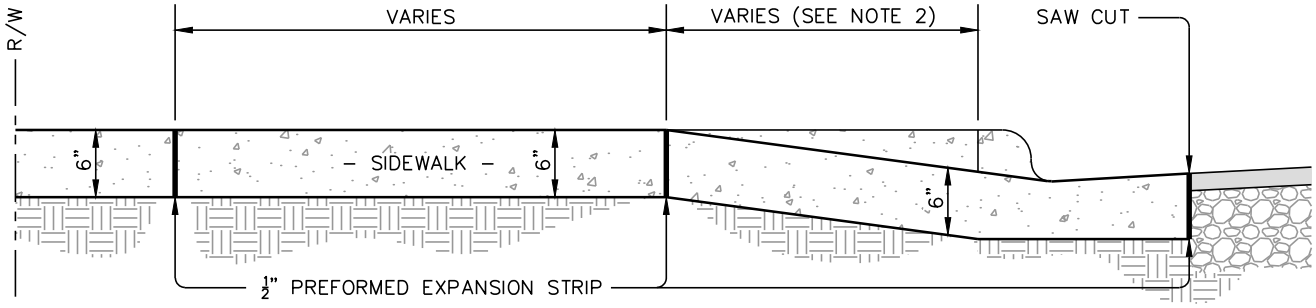

NOTES:

1. ALL CONCRETE SHALL BE 3,000 PSI @ 28 DAYS AIR ENTRAINED.
2. MAKE DRIVEWAY FLUSH WITH EXISTING SIDEWALK (IF PRESENT).
3. DRIVEWAY CONCRETE SHALL BE 6" THICK UP TO EXISTING PROPERTY LINE.

TITLE: **RESIDENTIAL CURB & GUTTER DRIVEWAY CONNECTION**		REV DATE: 8/10/15	DWG NO: S.002
PO BOX 1436 900 S. BECKFORD DRIVE HENDERSON, NC 27536	CITY OF HENDERSON	252-430-5728 (fax) 252-431-0124 www.ci.henderson.nc.us	SCALE: NTS
			SHEET #: 1 OF 1

CROSS SECTION

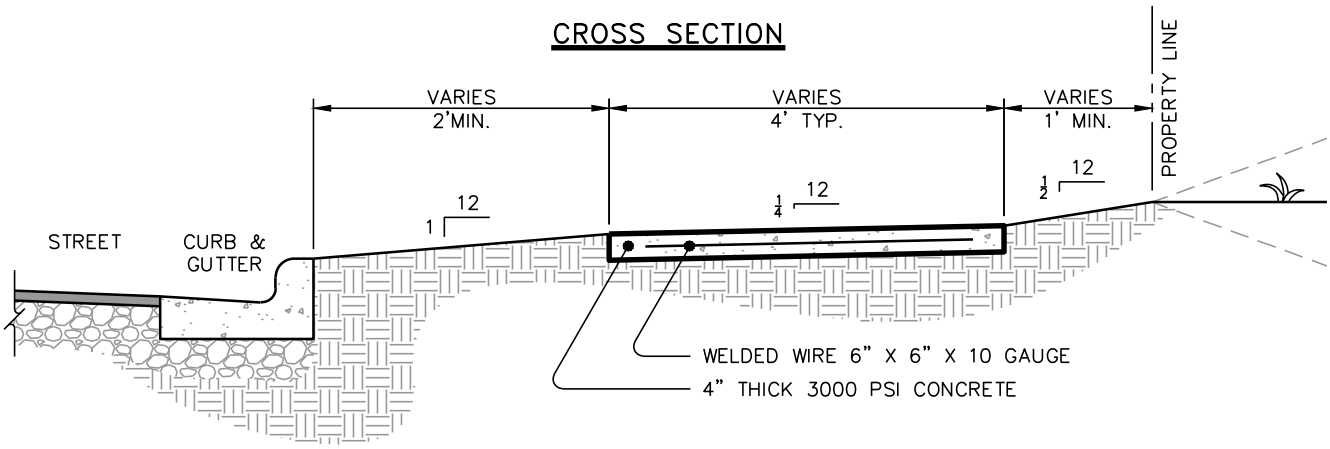

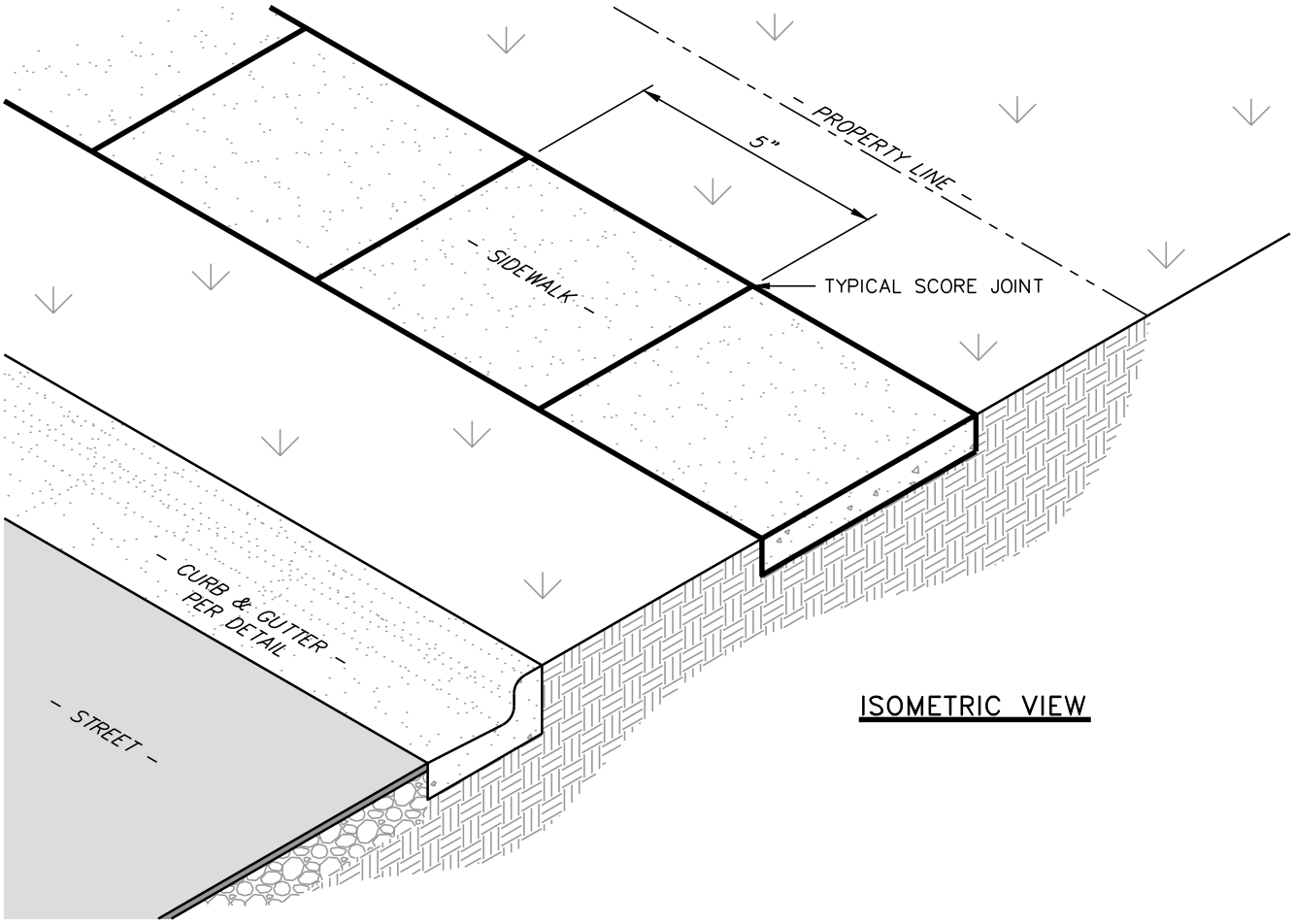

ISOMETRIC VIEW

NOTES:

1. PROVIDE 1" DEEP TOOLED TRAVERSE STRUCTURAL SCORE JOINT WITH $\frac{1}{8}$" RADIUS EVERY 5'.
2. $\frac{1}{2}$" PREFORMED ASPHALT IMPREGNATED EXPANSION STRIP JOINTS TO BE PLACED EVERY 30', ADJACENT TO CURBS, WHEN BUTTING EXISTING STRUCTURES, CONCRETE, OR BUILDINGS, AND AT CHANGES IN WIDTH.

	TITLE: **STANDARD SIDEWALK**		REV DATE: 8/10/15	DWG NO: S.001
PO BOX 1436 900 S. BECKFORD DRIVE HENDERSON, NC 27536	CITY OF HENDERSON	252-430-5728 (fax) 252-431-0124 www.ci.henderson.nc.us	SCALE: NTS	SHEET #: 1 OF 1

EXISTING CURB + GUTTER PROCEDURE

STEP 1

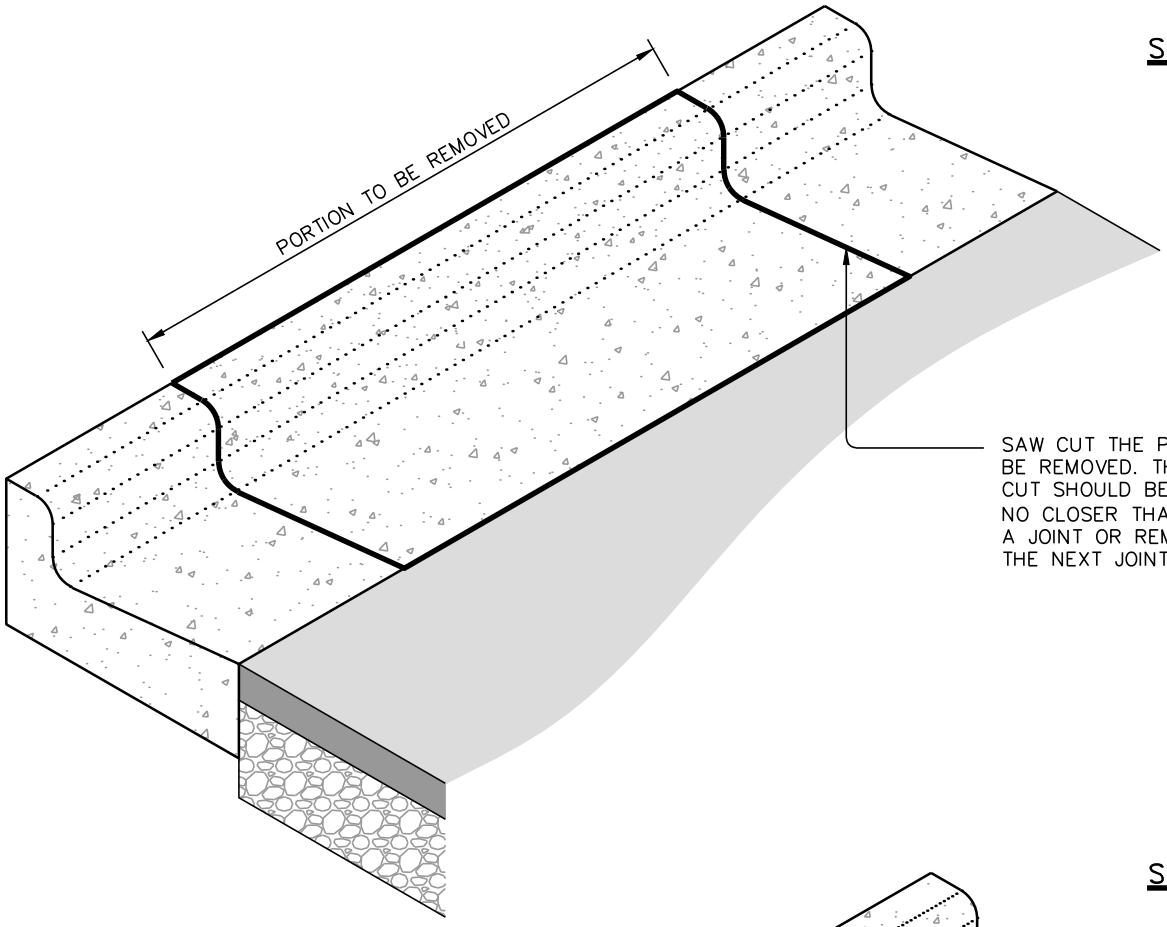

STEP 2

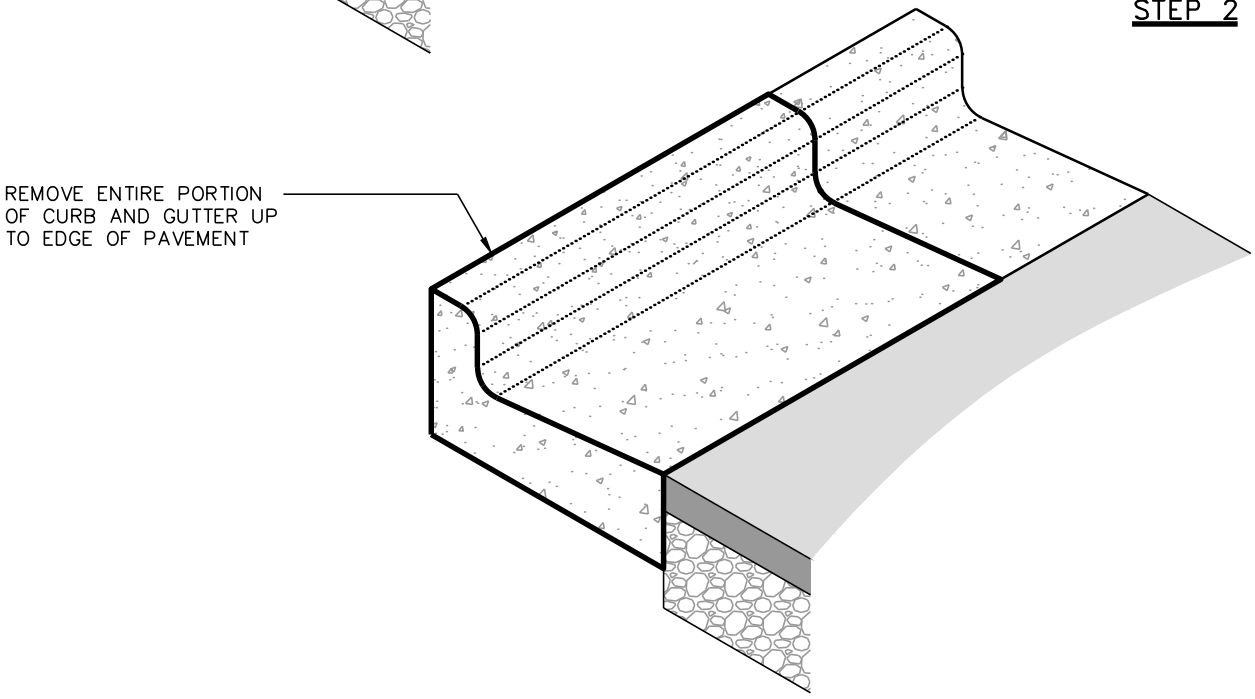

CITY OF HENDERSON NORTH CAROLINA	TITLE: **EXISTING CURB & GUTTER REMOVAL**		REV DATE: 8/10/15	DWG NO: S.005
	PO BOX 1436 900 S. BECKFORD DRIVE HENDERSON, NC 27536	CITY OF HENDERSON	252-430-5728 (fax) 252-431-0124 www.ci.henderson.nc.us	SCALE: NTS SHEET #: 1 OF 1